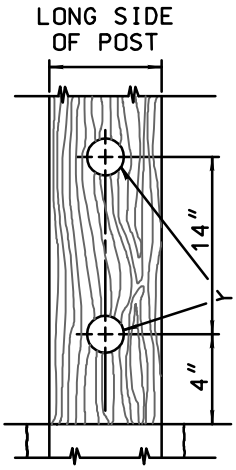

DETAIL "A"

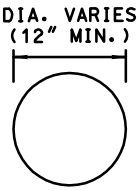

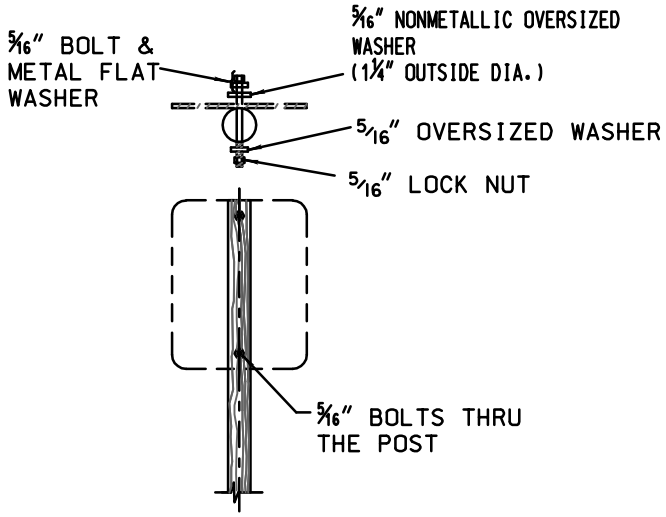

TYPICAL MOUNTING
FOR SIGNS WITHOUT
BRACE ANGLES

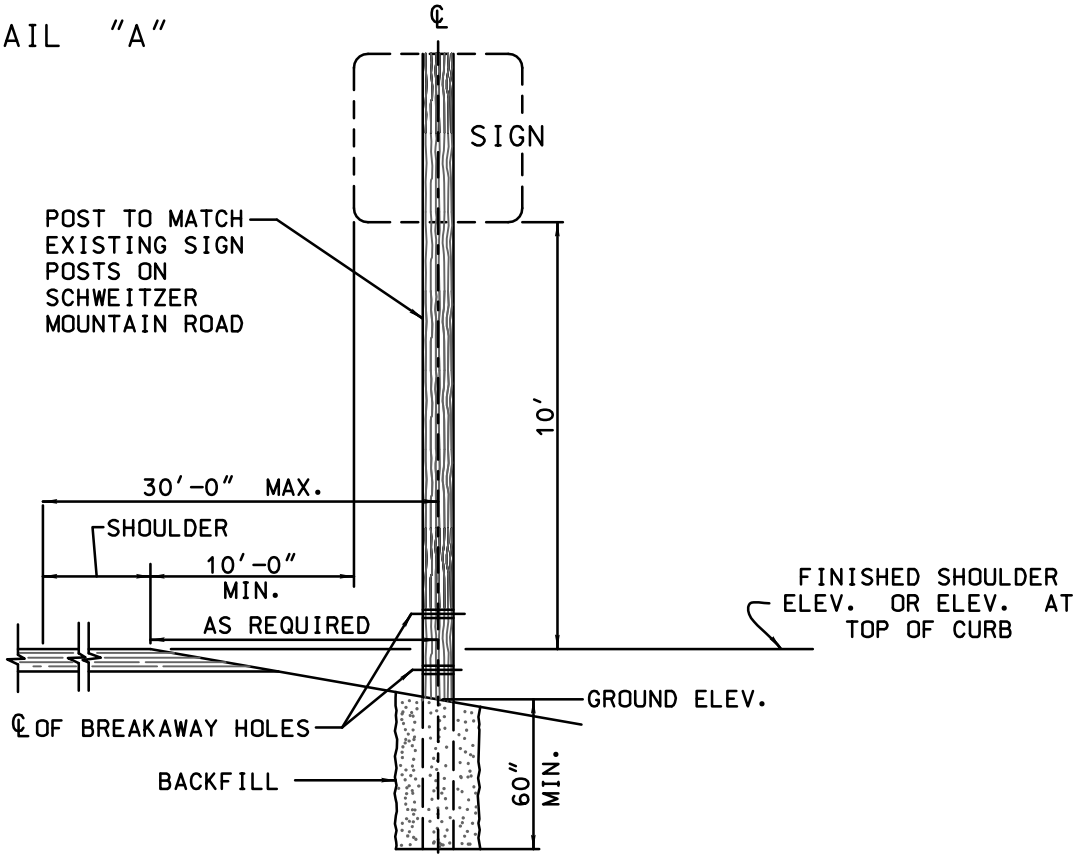

INSTALLATION DETAIL

DATE:	JANUARY 2008	SIGN INSTALLATION
DESIGNED BY:	RJLE	INDEPENDENT HIGHWAY DISTRICT BONNER COUNTY, IDAHO
FILE:	SD-1131.DWG	
SHEET:	SD-1131	