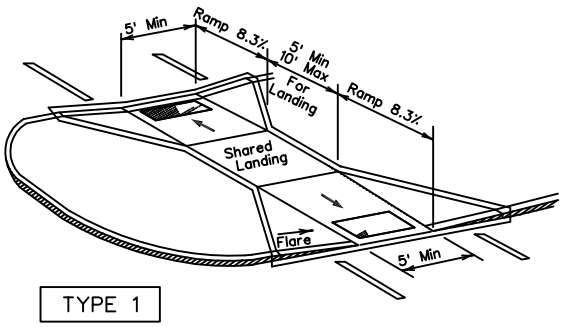

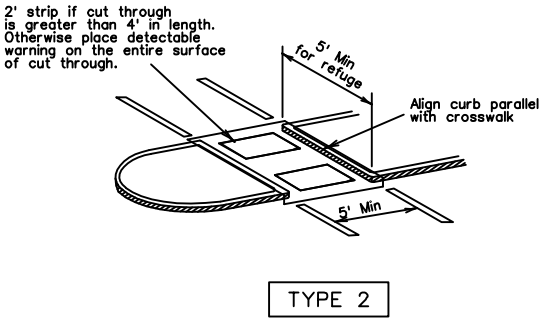

CURB RAMPS AT MEDIAN ISLANDS

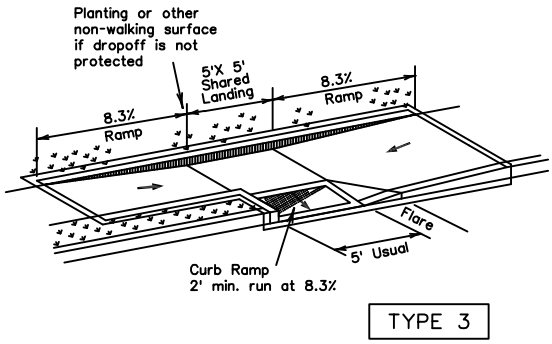

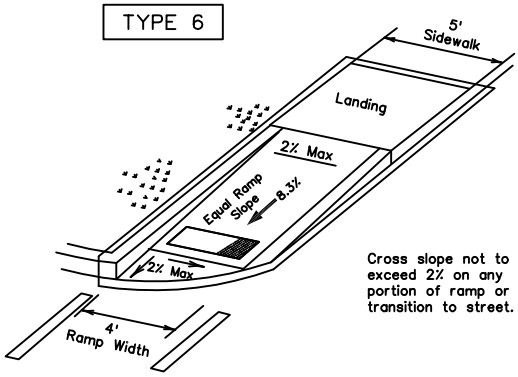

DIRECTIONAL RAMP WITHIN RADIUS
(Sidewalk adjacent to curb)

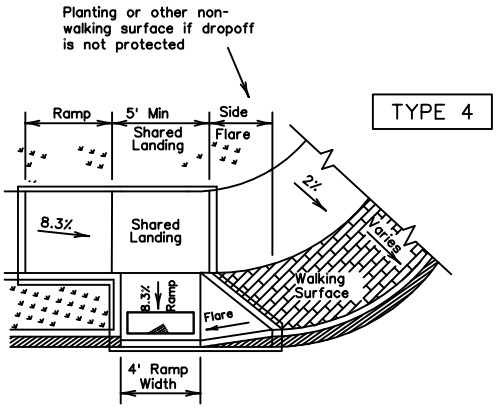

COMBINATION CURB RAMPS

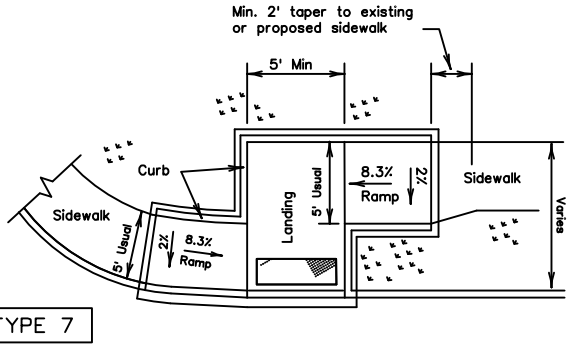

OFFSET PARALLEL CURB RAMP

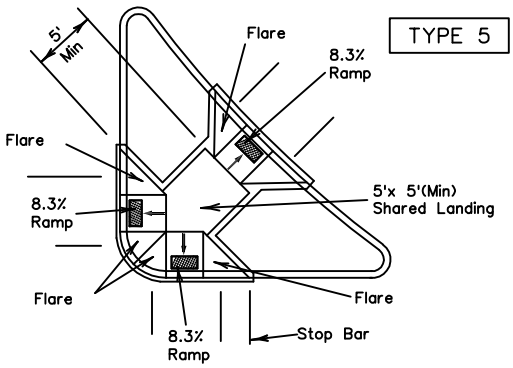

COMBINATION ISLAND RAMPS

DATE:	JANUARY 2008	STANDARD PEDESTRIAN CURB DROP
DESIGNED BY:	RJLE	INDEPENDENT HIGHWAY DISTRICT BONNER COUNTY, IDAHO
FILE:	SD-4.DWG	
SHEET:	SD-4	